DETERMINATION OF THE SPRAY DROPLET SIZE SPECTRUM FROM DUAL-PURPOSE DISC AGROCHEMICAL APPLICATOR

ABUBAKAR, M.S.

Department of Agricultural Engineering, Bayero University, Kano-Nigeria
Email: abubakarms@gmail.com

ABSTRACT

Application of liquid chemical on agricultural fields is mainly performed using hydraulic nozzle sprayers. However, in this study a dual-purpose disc agrochemical applicator for field crops was developed to boost agricultural mechanization in crop production and also to overcome the safety concern of hazardous spray drift during agrochemical application by the field crop farmers. The dual-purpose disc agrochemical applicator was tested with in order to determine the spray droplet size spectrum. The result shows that the average values of volume median diameter (VMD) range from 342-102 µm at 2000-5000 rpm rotational disc speed at different values of application rate for NASA glyphosate liquid chemical. The average value of the number median diameter (NMD) varies from 82 to 209 µm for NASA glyphosate liquid solution. The mean values of coefficient of uniformity for droplet sizes expressed as VMD/NMD found in this study were in the range of 1.25 to 1.63 for the liquid chemical.

SIGNIFICANCE: The findings of the research study presented in this paper could be used to boost agricultural mechanization during the application of liquid chemical by the rice growers.

.

KEYWORDS: Spray, droplet size, spectrum, disc, agrochemical, applicator and field crop

1.0 INTRODUCTION

Agricultural mechanization is needed to replace the labour which is not available or is very expensive due to migration from rural to urban areas, making it very difficult to meet peak demands for crop (rice) production (Kanetani and Fauzi, 1991). Undoubtedly, agricultural mechanization plays an important role in crop production and could address problems like drudgery, high production cost, low quality work and the labour scarcity. Various tools in appropriate forms had been used in the history of crops cultivation. In Malaysia, like most developing countries of Southeast Asia, rice production power-intensive operations such as water pumping, land preparations, transplanting seedlings, harvestings and threshing are being mechanized but other operations like fertilizer and chemical (pesticides) applications are still performed with manually backpack conventional knapsack and motorized mistblower sprayers which have many disadvantages. These include; lack of uniformity of distribution applied to the crops, demanding high number of labour and drudgery in handling and loading of inputs on the field. Some common chemicals used in Malaysia for rice production include Paraquat, 2,4-D amine (2,4-dichlorophenoxy), endosulfan, atrazine, NASA glyphosate, chlorpyrifos, tributyltin (TBT), urea, ammonium sulphate, calcium ammonium nitrate, superphosphates, ammonium phosphate, potassium chloride potassium sulphate and NPK. Fertilizer application and control of pests/diseases are still very much labour dependent even when conventional knapsack and motorized mistblowers are used (Kanetani and Fauzi, 1991).

Generally, pesticide application is mainly performed using conventional hydraulic nozzles by manually or semi mechanized which is laborious and exposes the operator to health hazards. This is often highly inefficient with over 90% of the spray applied failing to reach the target area of the crop (Carlsen *et al.*, 2006; Matthews, 2008). But rotary atomizers produce a narrow range of drop sizes, 80% of which fall into the diameter range 50 to 137 µm at a volume median diameter (VMD) of 93 µm (Lefebvre, 1993). In the early 1980s, rotary atomizers were promoted to reduce herbicide application rates, but they were limited to unconfirmed testing (Juste *et al.*, 1990;

Pearson *et al.*, 1981). Also some researchers have revealed some physical discomfort and awareness of health risk associated with pesticide application such as operators' hazard when having direct contact of chemicals during field operation. Pearson *et al.*, (1981) found that spinning disc sprayers gave effective spray droplets with 250 µm VMD than lower values of VMD. Ilhan *et al.*,(2004) reported that 250-500 µm drop diameters for herbicide applications which is easier to deliver to the target surfaces. The high volume application methods used by some farmers could result in higher costs compared to using low volume method. Furthermore, at the moment, there has been a growing concern about the environmental problems (such as air and water pollution and decline in biodiversity) associated with the application of pesticides. For these reasons, accurate and uniform application of pesticides is absolutely important in minimizing environmental problems and costs. Over-doses can harm the environment seriously, as well as the crop itself. Consequently, the application methods of pesticides and the uniformity of the spray droplet sizes have become important research topics in agricultural engineering. The use of manually operated knapsack or backpack motorized mistblower could cause fatigue to the farmers. Hence there is the need for the development of a machine that can improve agrochemical application for liquid pesticides to boost agricultural mechanization for field crops and also to overcome the safety concern of hazardous spray drift during chemical application by farmers. This paper presents the determination of the spray droplet size spectrum from the dual-purpose disc agrochemical applicator for field crops.

2.0 MATERIALS AND METHODS

2.1 Design considerations: Rotary disc and liquid chemical characteristics (cone angle, disc diameter, density, viscosity, surface tension, and coefficient of friction) were taken into consideration during the equipment development. The detailed procedures were as reported in Inn and Reece (1962) and Abubakar *et al.*, (2011). Table 1 shows the disc characterization dimensions for liquid chemical application. Plate 1 shows the disc used for liquid chemical application.

Table 1: Disc's characterization dimensions for the liquid agrochemical application

Disc parameter	Value
Disc type	Flat plane
Disc cone angle α (^{o})	0
Disc radius (mm)	250

Plate 1: Flat plane disc used for the liquid agrochemical application

2.2 Description of the machine/operation: The main features of the dual-purpose disc agrochemical applicator include the tank, orifices, rotary discs, electric motor and the supporting frames (Figure 1). The applicator employs the use of two rotary discs rotating in opposite directions driven by 0.204 horse power electric motors (TM80-15150). The rotational speed can be varied continuously from near zero to about 5000 rpm by means of a rheostat speed controller. Liquid chemical materials inside the

hopper fall freely by gravity through the orifices and drop directly on the rotating discs (impeller) and subsequently applied to the field. A flat plane disc rotates at a speed of zero to above 5000 rpm and atomizes liquid into fine spray. The centrifugal force of the rotary disc throws the material in an arc pattern over a distance to the right, front, and to the left.

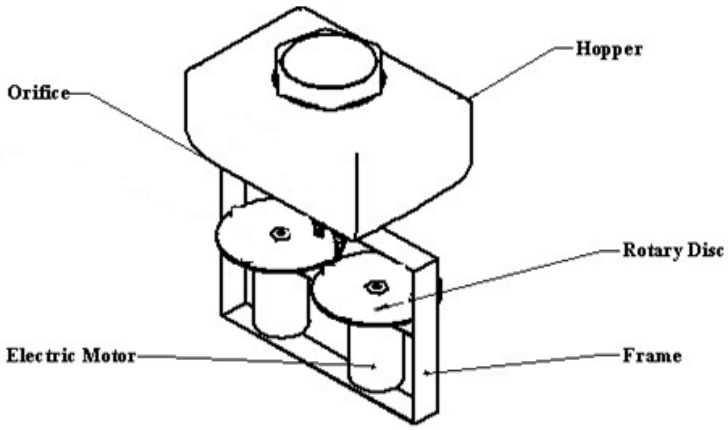

Figure 1: 3D diagram of the dual-purpose disc agrochemical applicator

2.3 Performance test procedure: The dual-purpose disc agrochemical applicator spray droplet size spectrum tests were conducted as recommended by ASAE standard S341.4, method (Standards, 2009). Tests were conducted outdoor as it is the most representative of what performance is achievable in the field (Plate 2). A total of five transverse tests for the NASA glyphosate liquid chemical were conducted. Each test was repeated three times and the mean values were reported. Before the experiment, the applicator was calibrated into three different flow rates for the NASA glyphosate liquid chemicals. The openings of the orifices for the applicator were set at position low (30 l/ha), medium (60 l/ha) and high (90 l/ha). These application rates were obtained from the adjusting of the chemical flow on to rotary discs using manually operated valves to achieve constant application rate and were deemed as typical target operator of the equipment (Ilhan *et al.*, 2004; Matthews, 2000, 2008). The disc rotary speed was set at 2000, 3000, 4000 and 5000 rpm.

Plate 2: Arrangement of water-sensitive paper for spray droplet collection

Water-sensitive paper (WSP) was used in this study to evaluate the droplet sizes formed by the dual-purpose disc agrochemical applicator. The WSP images were captured using high resolution camera 1:1.4/12.5m (HF12.5HA-1B) after it was allowed to dry for 30 minutes and then scanned using Program FlexScan 2D (Plate 3). The percentage spray droplets cover, number of droplets per square centimeter, size distribution of droplets and volume/mass deposited, droplet density per unit area, the VMD and NMD of

their spectrum on each paper were all estimated and analyzed using Matlab software program. The VMD and NMD of the spray droplet spectrum were determined to ascertain the spray characteristics and coefficient of uniformity.

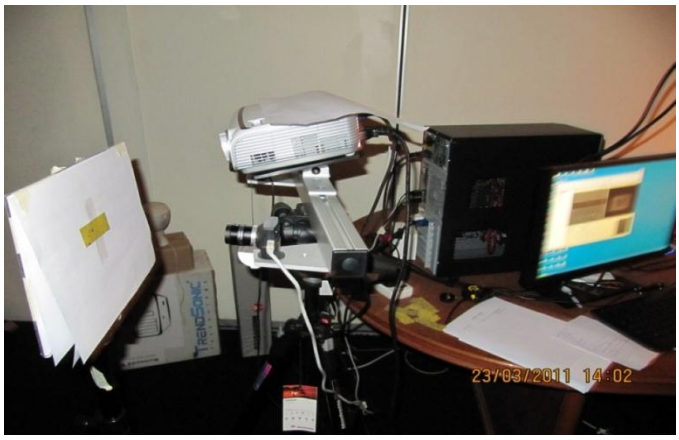

Plate 3: Equipment set-up for WSP image processing

2.4 Statistical analysis: All data were analyzed with completely randomized block design method using SAS 9.2 statistical software to identify statistical differences between the various combinations of equipment input parameters and the coefficient of uniformity as the output. Analysis of variance (ANOVA) was conducted for each of these inputs and output parameters and lastly differences between mean values were based on Duncan's multiple range tests (DMRT) at 95% confidence level.

3.0 RESULTS AND DISCUSSION

NASA glyphosate liquid chemical solutions was tested at application rates of 30 (low), 60 (median) and 90 l/ha (high) at four different rotary disc speeds of 2000, 3000, 4000 and 5000 rpm with a diameter disc of 300 mm. Result shows that the average values of volume median diameter (VMD) range from 342-102 µm at 2000-5000 rpm rotational disc speed at different values of application rate for NASA glyphosate liquid chemical. The average value of the number median diameter (NMD) varies from 82 to 209 µm for NASA glyphosate liquid solution. These values were determined in order to ascertain the liquid solution spray characteristics. The average values for coefficient of uniformity of the droplet spectrum (CU) expressed as VMD/NMD were found to be in the range from 1.25 to 1.63 for NASA glyphosate liquid chemical (Table 2). The best liquid chemical coefficient of uniformity (CU) 1.25 was obtained at the combinations of 5000 rpm rotary disc speed and 90 l/ha application rate.

Table 2: Average values of VMD, NMD, CU_L and DD for NASA glyphosate liquid chemical with different machine input parameter

Machine parameter	VMD (µm)	NMD (µm)	CU = VMD/NMD	Droplet Density (DD) (No/cm^2)
DS1LARDD1	342	209	1.63	22.5
DS1HARDD1	290	183	1.58	26.3
DS2MARDD1	230	156	1.48	23.8
DS2HARDD1	202	143	1.41	25.2
DS3MARDD1	189	137	1.38	30.7
DS3HARDD1	113	87	1.30	35.1
DS4LARDD1	140	104	1.36	30.8
DS4HARDD1	102	82	1.25	45.3

Key: DS1 = Disc speed 1 at 2000 rpm, DS2 = Disc speed 2 at 3000 rpm, DS3 = Disc speed 3 at 4000 rpm, DS4 = Disc speed 4 at 5000 rpm, LAR = low application rate at 30 l/ha, MAR = median application rate at 60 l/ha, HAR = high application rate at 90 l/ha, DD1 = disc diameter 1 at 300 mm.

NASA glyphosate liquid chemical spray droplet size: Figures 3-4 present the droplet size spectrums for NASA glyphosate liquid chemical on the scanned WSP. At different values of liquid application rate, the average values of droplet volume median diameter (VMD) range from 102-342 µm at 5000-2000 rpm rotational disc speed respectively.

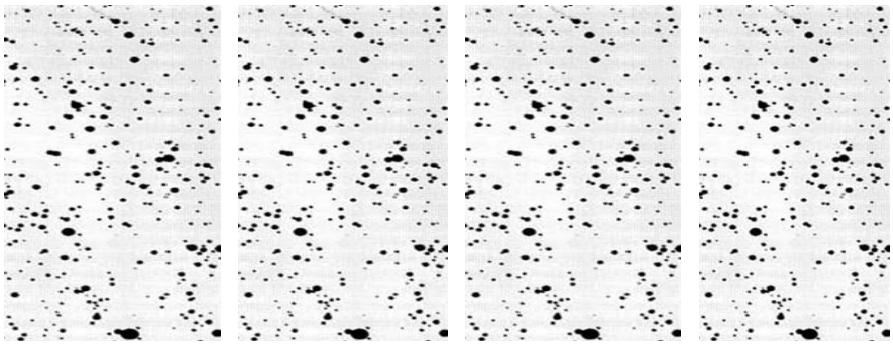

Figure 3**: NASA liquid chemical spray droplet size at 2000 rpm disc speed, 30 l/ha application rate and 300 mm disc diameter**

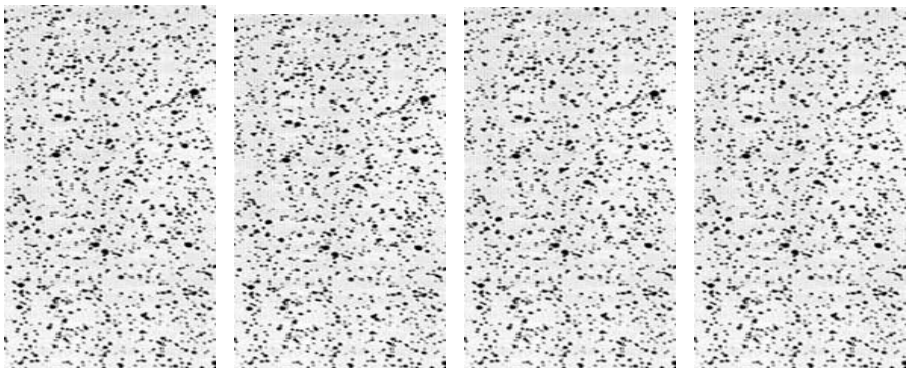

Figure 4: NASA liquid chemical spray droplet size at 5000 rpm disc speed, 90 l/ha application rate and 300 mm disc diameter

It was found that the volume median diameter (VMD) of the spray droplet size spectrum decrease with increase in liquid flow rate and disc rotational speed. Smallest droplet volume median diameter (102 µm) was obtained at the highest application rate (90 lt/ha) and highest disc rotational speed (5000 rpm). This finding is in agreement with the result obtained by Lefebvre (1993) who found droplet sizes of a rotary sprayer with VMD in the range of 120 to 300 micron to be most effective for liquid chemical application. This shows that the dual-purpose disc agrochemical applicator converts more liquid into fine droplets in comparison with that reported for motorized flat fan pressure knapsack nozzle sprayers with 60-70% droplets larger than 250 µm. Statistically, the effect of flow rate and disc speed was significant at $P < 0.01$ level for all combinations. The average values of coefficient of uniformity (expressed as VMD/NMD) for droplet sizes spectrum found in this study ranged from 1.25 to 1.63 (Table II). The ratio of VMD and NMD (CU) gives the coefficient uniformity of the droplet spectrum; with values close to 1.0 as the more uniform the droplet spectrum and larger the value of

CU gives wider the range of droplet sizes. This indicates that the spray droplet spectra obtained were more uniform when compared to the typical values of droplet size produced by both conventional knapsack and motorized mist blower sprayers with hydraulic pressure nozzles ranging from 2.5 to 6.0 as reported by Ilham *et al.* (2004). Statistically, the effect of chemical flow rate and rotary disc speed on the droplet spectrum was highly significant at $P < 0.05$ level at all combinations.

4.0 CONCLUSION

The study concluded that the spray droplets size spectrum formed from the disc agrochemical applicator is uniform when a liquid chemical is atomized under suitable conditions, droplet volume median diameter of a liquid chemical change with an increase of application rate and rotary disc speed. The average values of volume median diameter (VMD) obtained ranged from 102-342 microns at three different application rates and three different rotary disc speeds. Therefore the machine has the potential of addressing the risk to human health and the environment. It could be used to boost agricultural mechanization during the application of liquid chemical by the rice growers.

5.0 REFERENCES

Abubakar, M. S., Ahmad, D., Jamarei, O., Sulaiman, S. and Norhisam, M. (2011). Evaluation of a Dual-Purpose Chemical Applicator for Paddy Fields. *American Journal of Applied Sciences*, 8 (4): 362-367.

Carlsen, S. C. K., Spliid, N. H. and Svensmark, B. (2006). Drift of 10 Herbicides after Tractor Spray Application 1: Secondary Drift (Evaporation). *Chemosphere*, 64: 778-786.

Ilhan, U., Ali, B., Ahmet, U., Nigar, B., Eda, A., Alper, S. and Oya, G. (2004). Studies on Different Herbicide Application Methods in Second-Crop Maize Fields. *Crop Protection* 23(11): 1137-1144.

Inns, F. M. and Reece, A. R. (1962). The Theory of the Centrifugal Distributor II: Motion on the Disc, Off-Centre Feed. *Journal of Agricultural Engineering Research*, 7(4): 345-353.

Juste, F., Sanchez, S., Ibanez, R., Val, L. and Garcia, G. (1990). Measurement of Spray Deposition and Efficiency of Pesticide Application in Citrus Orchard. *Journal of Agricultural Engineering Research*, 46 187-196.

Kanetani, Y. and Fauzi, M. M. (1991). Mechanized direct seeding of rice in Muda, Malaysia. *JARQ*, 25(3): 209-213.

Lefebvre, A. H. (1993). *Droplet Production, In: Matthews G.A.Heslop E.C. (ed.) Application Technology for Crop Protection*: CAB International

Matthews, G. A. (2000). *Pesticide Application Methods, 3rd ed*: Osney Mead, Oxford: Blackwell Science Ltd.

Matthews, G. A. (2008). Developments in Application Technology. *The Environmentalist*, 28(1): 19-24.

Pearson, S. C., Bode, L. E. and Butler, B. J. (1981). *Characteristics of Controlled Droplet Applicators.* Paper presented at the North Central Weed Control Conference, USA.

Standards, A. (2009). Agricultural Engineers Standards, S341.3, St. Joseph, Mic. *ASAE*.